22SMB 50-0-3

9.8.78 p.

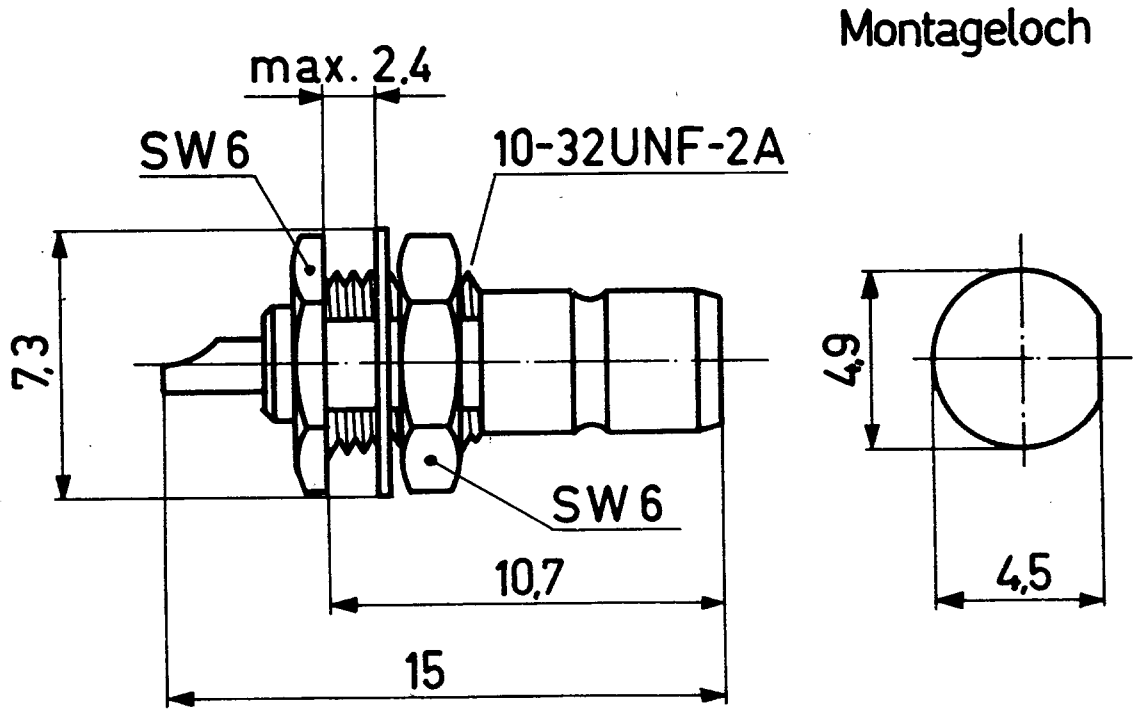

HUBER + SUHNER AG

4.13.171

a